5° SKEW VARIABLE BRIDGE WIDTH 2:1 FILL SLOPES WINGS PARALLEL TO ROADWAY

ABUTMENT SKEW CORRECTION FACTOR (SCF) = 1.004

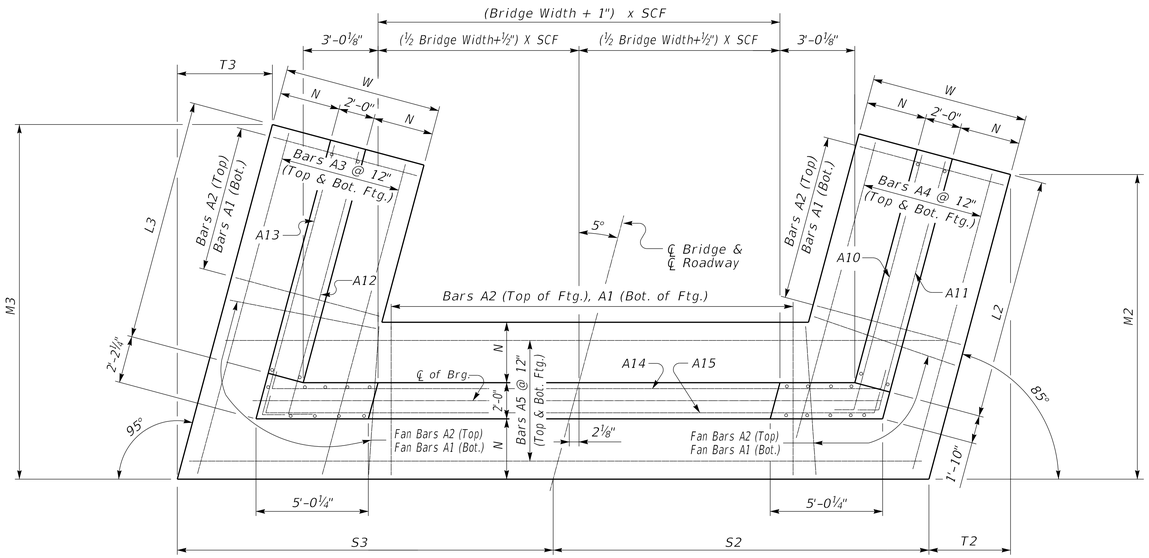

(Left Skew as shown;right skew opp. hand)

PLAN

NOTE: Trim A16 & A17 bars if necessary
Trim A3 bars as necessary

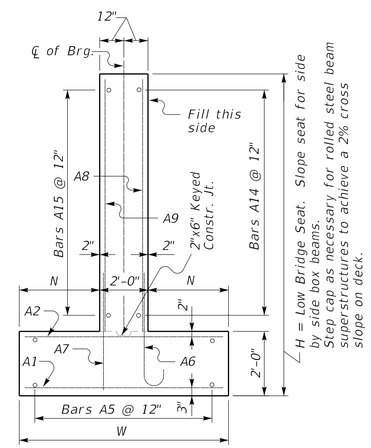

WALL SECTION

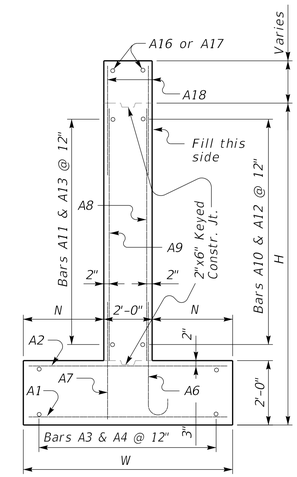

WING SECTION

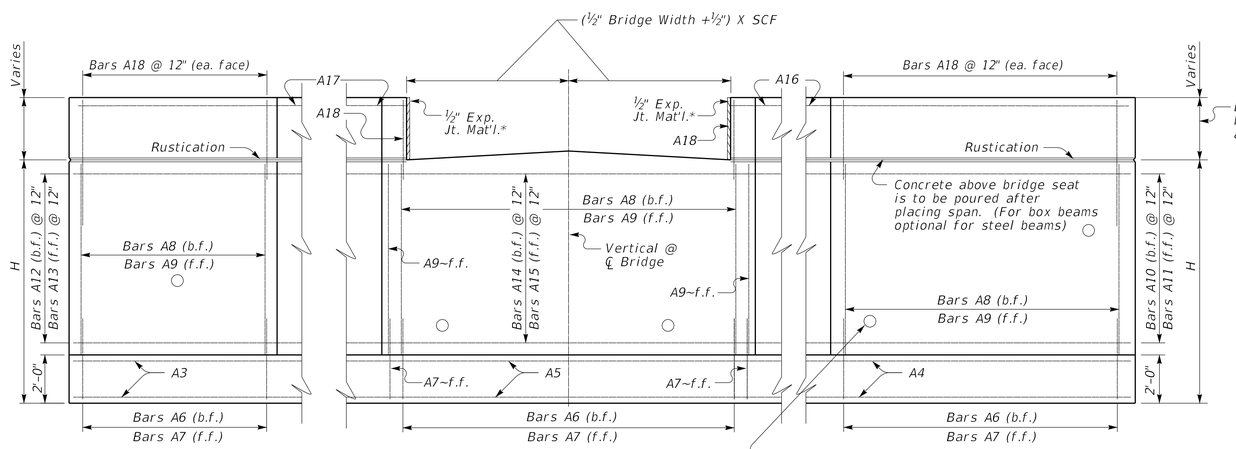

ELEVATION

Place 4" weep hole drains at 8'-0" centers at such elevation as to afford best drainage of backfill, in accordance with the Standard Specifications.

*Expansion Joint Material:
AASHTO M153
Type-I Sponge Rubber

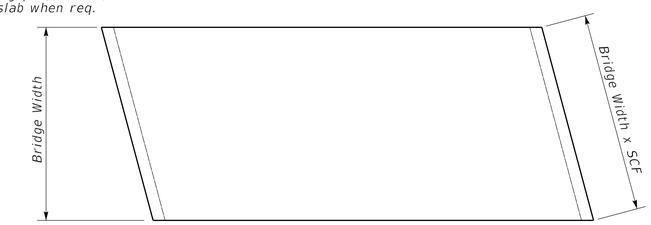

PLAN OF SUPERSTRUCTURE SLAB

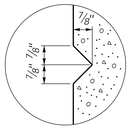

RUSTICATION GROOVE

REVISION DATE: 08/11/2025
REVISION NUMBER: 0

SUBMITTED Michael Cornett 08-11-2025
DIVISION DIRECTOR DATE

APPROVED Jason Ballinger 08-11-2025
STATE HIGHWAY ENGINEER DATE

BRIDGE STANDARDS

COMMONWEALTH OF KENTUCKY
DEPARTMENT OF HIGHWAYS

5° SKEW SUPPORT VARIABLE WIDTH ABUTMENT PARALLEL WINGS

STANDARD DRAWING NUMBER
BSA-043-01

OpenRoads Designer v23.00.01.11